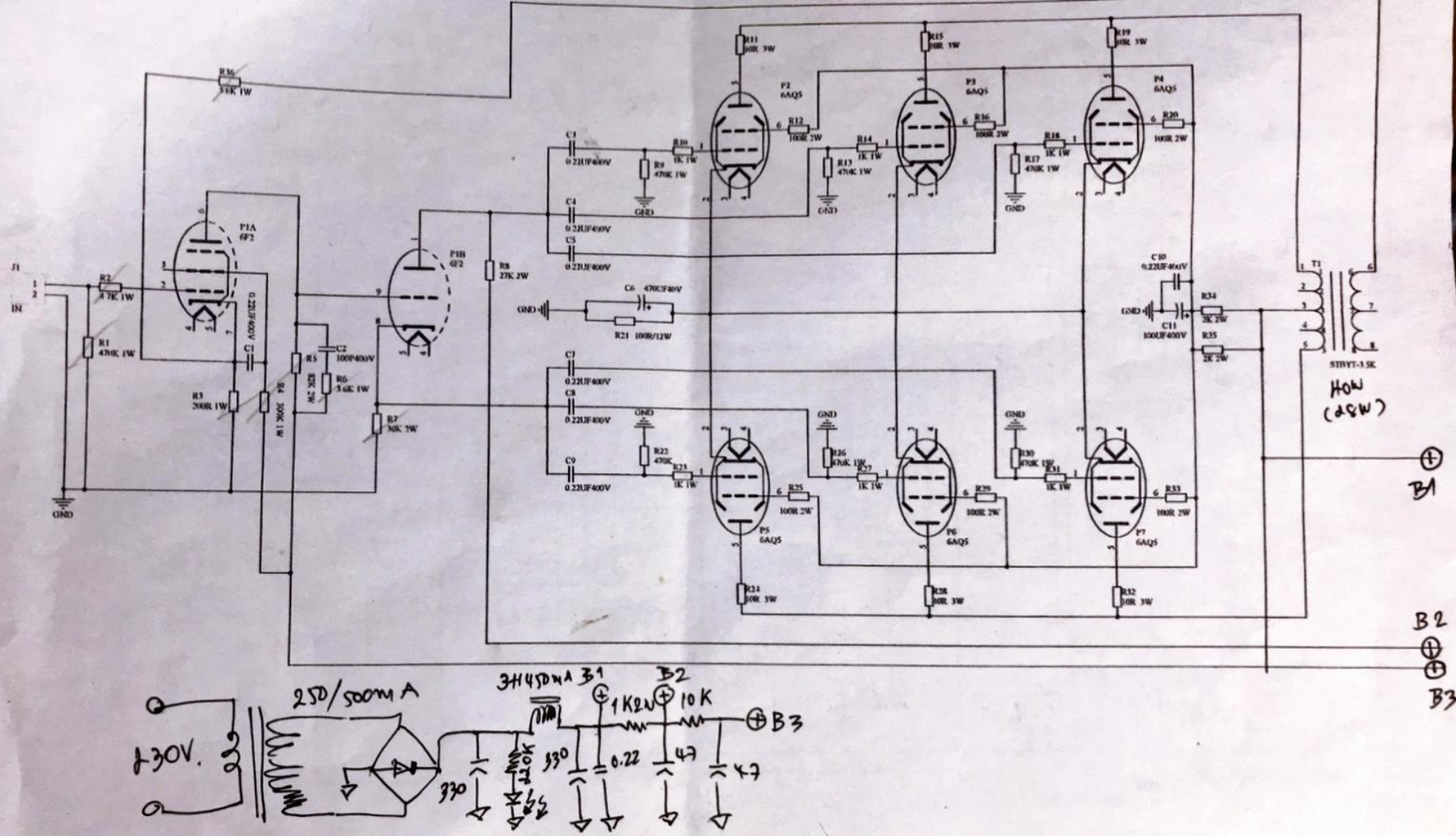

P1A 6F2
P1B 6F2
P2 6AQ5
P3 6AQ5
P4 6AQ5
P5 6AQ5
P6 6AQ5
P7 6AQ5
J1
IN
GND
R1 470K 1W
R2 47K 1W
R3 200R 1W
R4 500K 1W
R5 82K 2W
R6 3.6K 1W
R7 30K 2W
R8 27K 2W
R9 470K 1W
R11 100R 3W
R12 100R 2W
R13 470K 1W
R14 1K 1W
R15 100R 3W
R16 100R 2W
R17 470K 1W
R18 1K 1W
R19 100R 3W
R20 100R 2W
R21 100R/12W
R22 470K
R23 1K 1W
R24 100R 3W
R25 100R 2W
R26 470K 1W
R27 1K 1W
R28 100R 3W
R29 100R 2W
R30 470K 1W
R31 1K 1W
R32 100R 3W
R33 100R 2W
R34 2K 2W
R35 2K 2W
C1 0.22UF400V
C2 100P400V
C3 0.22UF400V
C4 0.22UF400V
C5 0.22UF400V
C6 470UF40V
C7 0.22UF400V
C8 0.22UF400V
C9 0.22UF400V
C10 0.22UF40xV
C11 100UF400V
T1
5THYT-3.5K
HOW (25W)
B1
B2
B3
250/500mA
3H45DHA 3V
1K2W
10K
330
0.22
47
4.7
220V.